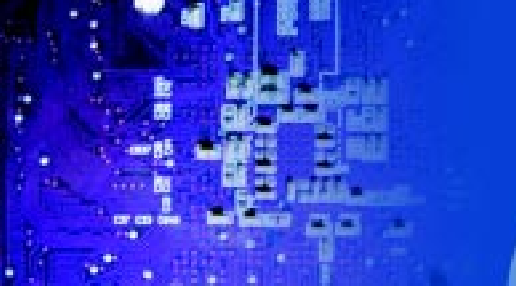

M3 series

1U rack mount LCD keyboard drawer
with 16 port Cat6 KVM Switch

Installation Guide

M3series 1U rack mount monitor keyboard drawer

ACNODES
661 Brea Canyon Rd., Suite 3
Walnut, CA 91789
tel: 909.598.7388, fax: 909.598.0218, www.acnodes.com

© Copyright 2009 Acnodes, Inc.
All rights reserved. Product description and product specifications are subject to change without notice. For latest product information, please visit Acnodes' web site at www.acnodes.com.

Index

Chapter 1

1.1 How to install "One-Man" installation slides into rack.................................1
1.2 How to install "One Man" installation slides...2
1.3 How to use the slides..3
1.4 Connection KVM modules...4
1.5 Cascade KVM modules..5
1.6 Receiver Box (Optional)...6
1.7 Receiver Connection (Optional)...7
1.8 KVM cables...8

ACNODES
661 Brea Canyon Rd., Suite 3
Walnut, CA 91789
tel: 909.598.7388, fax: 909.598.0218, www.acnodes.com

© Copyright 2009 Acnodes, Inc.
All rights reserved. Product description and product specifications are subject to change without notice. For latest product information, please visit Acnodes' web site at www.acnodes.com.

1.1 How to Install "One Man" Installation Slides into rack

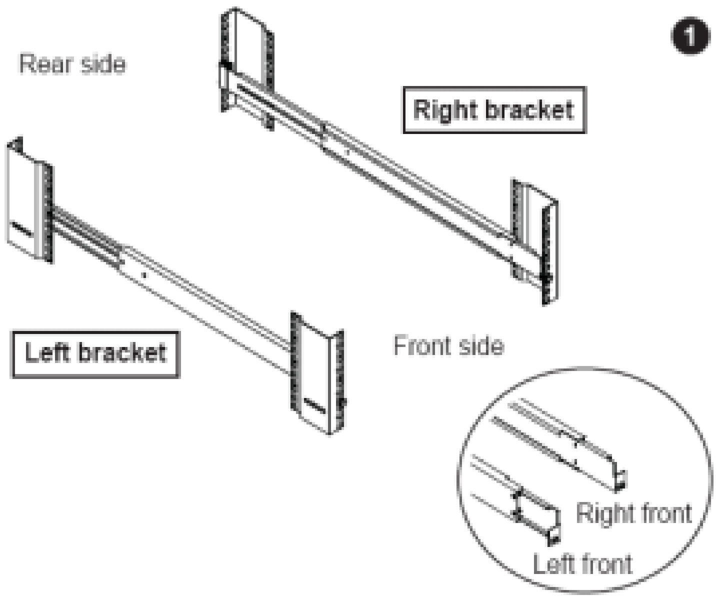

Attach the left and right mounting bracket to rack 19" mounting rails.
Adjust the rear mounting bracket to fit your rack.
M6 screw and cup washer x 6 piece included.
Caution : Leaving the screws slightly loose, until you complete the installation in step 4

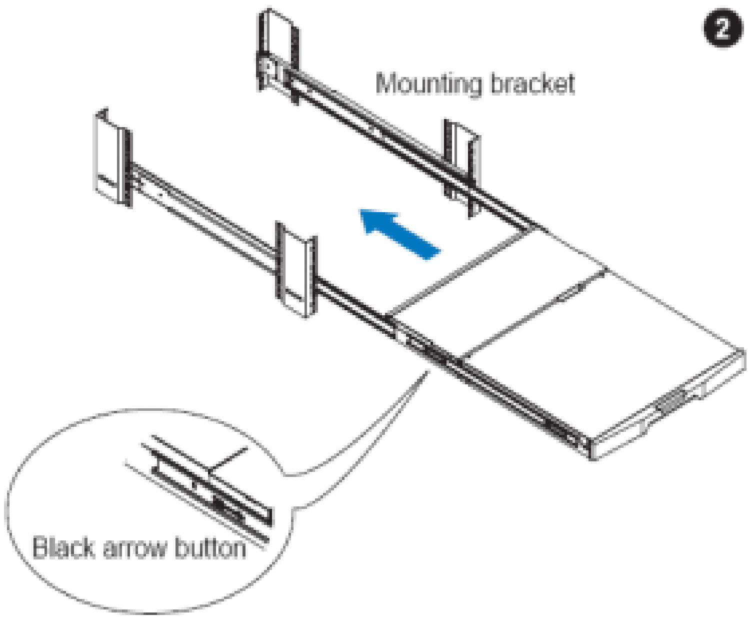

Pick up the LCD keyboard drawer.
Insert the LCD keyboard drawer into the mounting bracket.
Pull and hold the left & right black arrow buttons on the rails.
Return the LCD keyboard drawer to park position

ACNODES
661 Brea Canyon Rd., Suite 3
Walnut, CA 91789
tel: 909.598.7388, fax: 909.598.0218, www.acnodes.com

© Copyright 2009 Acnodes, Inc.
All rights reserved. Product description and product specifications are subject to change without notice. For latest product information, please visit Acnodes' web site at www.acnodes.com.

1.2 How to Install “One Man” Installation Slides

3

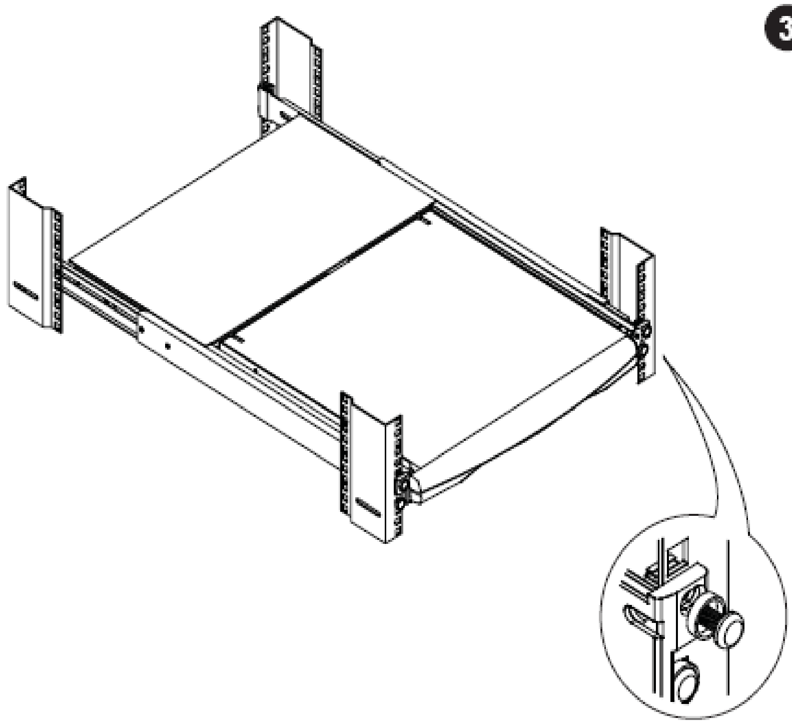

Attach front left and right mounting ears of the LCD keyboard drawer to vertical mounting rails.

? M6 screw and cup washer x 2 pcs included.

4

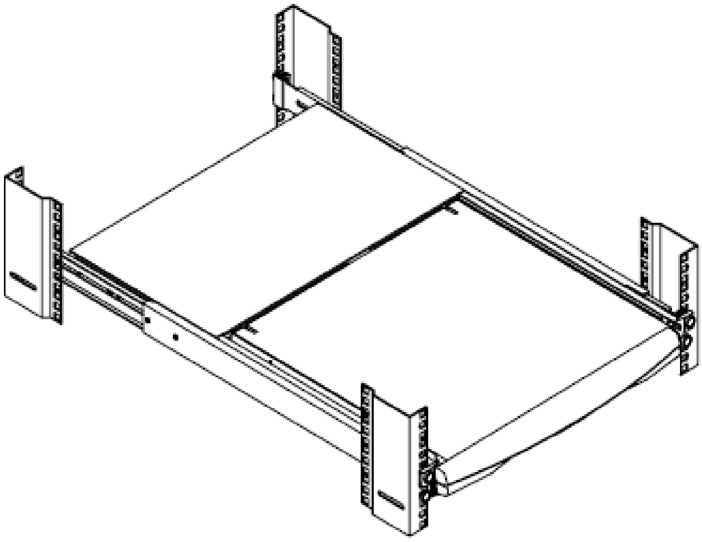

lete the installation

ten all 8 piece of M6 screw to complete the installation

ACNODES
661 Brea Canyon Rd., Suite 3
Walnut, CA 91789
tel: 909.598.7388, fax: 909.598.0218, www.acnodes.com

© Copyright 2009 Acnodes, Inc.
All rights reserved. Product description and product specifications are subject to change without notice. For latest product information, please visit Acnodes’ web site at www.acnodes.com.

1.3 How to Use the Slides

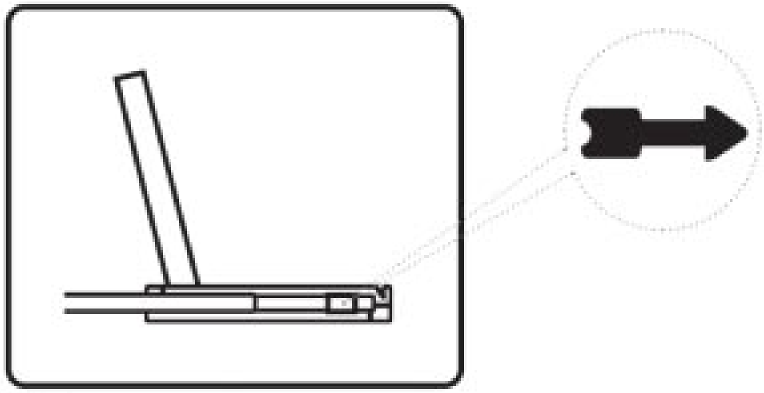

Figure 1

? A black arrow release button is located on the outside of each slide. (shown in Figure 1).

Figure 2

Pull and hold the black arrow button on either side of the LCD keyboard drawer to unlock. (shown in Figure 2).

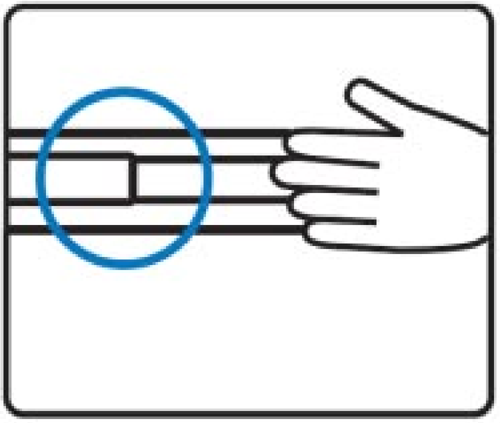

Figure 3

? Push the LCD keyboard drawer into the rack. (shown in Figure 3).

Caution : Keep your fingers away from the slide stop

ACNODES
661 Brea Canyon Rd., Suite 3
Walnut, CA 91789
tel: 909.598.7388, fax: 909.598.0218, www.acnodes.com

© Copyright 2009 Acnodes, Inc.
All rights reserved. Product description and product specifications are subject to change without notice. For latest product information, please visit Acnodes' web site at www.acnodes.com.

1.4 Connection KVM modules

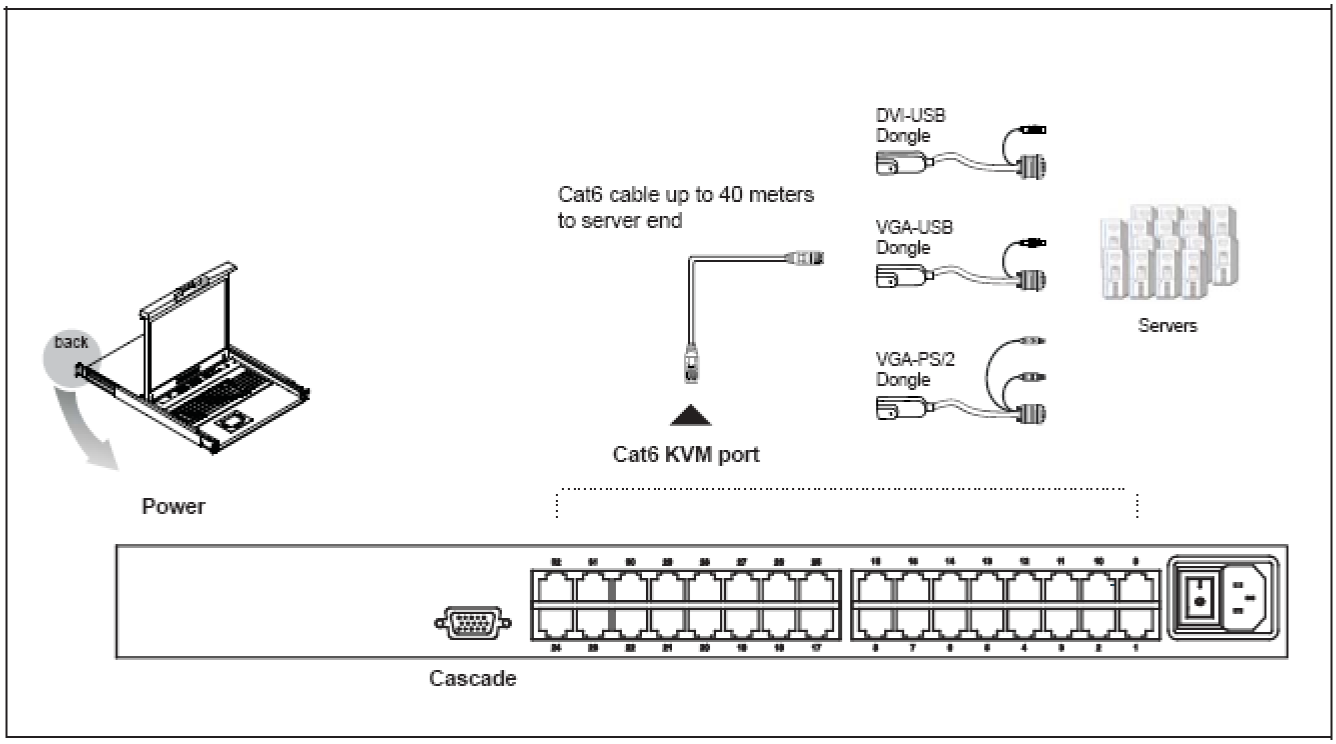

ACNODES
661 Brea Canyon Rd., Suite 3
Walnut, CA 91789
tel: 909.598.7388, fax: 909.598.0218, www.acnodes.com

© Copyright 2009 Acnodes, Inc.
All rights reserved. Product description and product specifications are subject to change without notice. For latest product information, please visit Acnodes' web site at www.acnodes.com.

1.5 Cascade KVM Modules

-Cascade up to 8 level, 256 servers
-Interconnection with Combo DB-15 KVM
-Cascading multiple KVM with cable

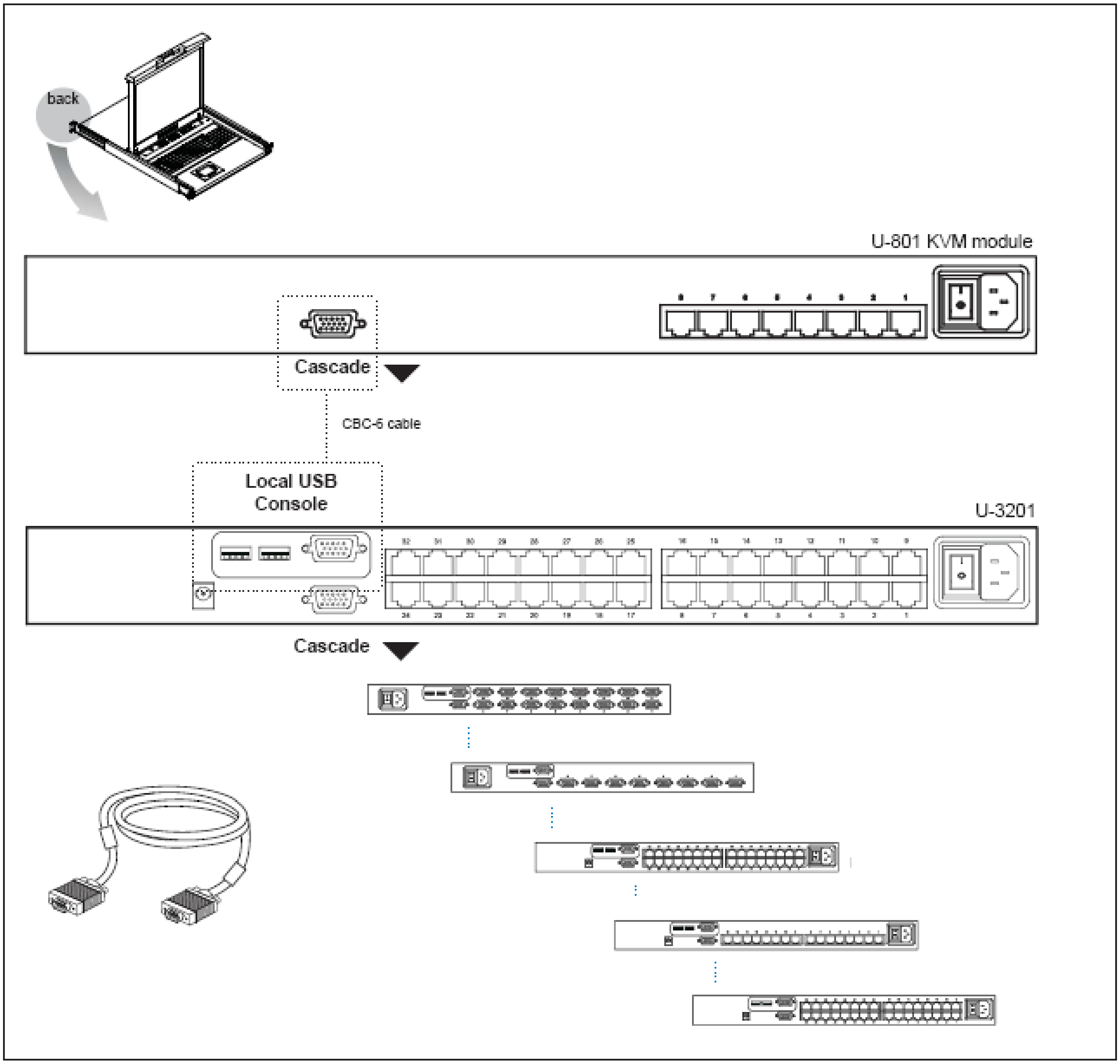

ACNODES
661 Brea Canyon Rd., Suite 3
Walnut, CA 91789
tel: 909.598.7388, fax: 909.598.0218, www.acnodes.com

© Copyright 2009 Acnodes, Inc.
All rights reserved. Product description and product specifications are subject to change without notice. For latest product information, please visit Acnodes' web site at www.acnodes.com.

1.6 Receiver Box (Optional)

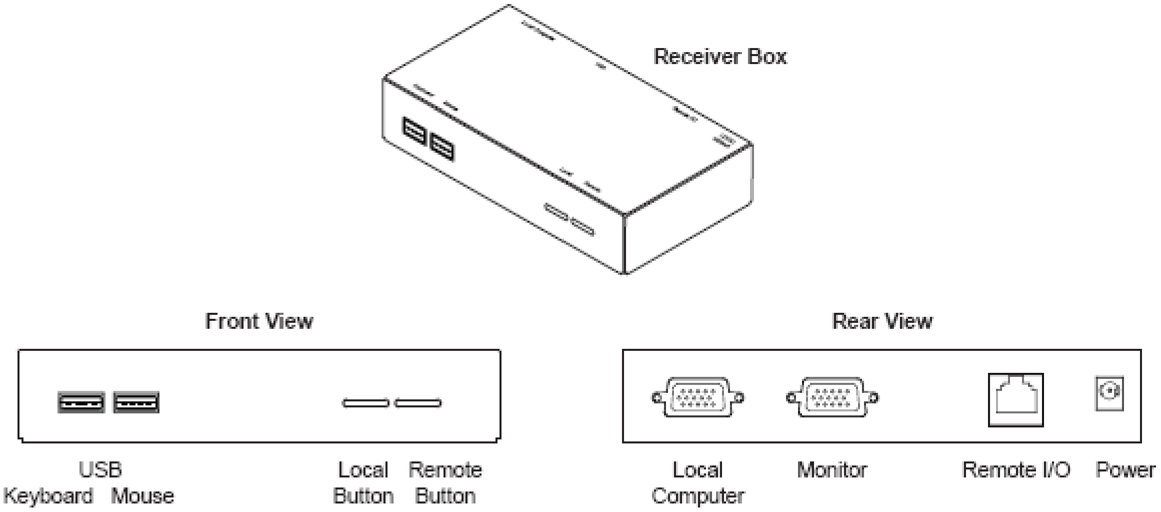

661 Brea Canyon Rd., Suite 3
Walnut, CA 91789
tel: 909.598.7388, fax: 909.598.0218, www.acnodes.com

© Copyright 2009 Acnodes, Inc.
All rights reserved. Product description and product specifications are subject to change without notice. For latest product information, please visit Acnodes' web site at www.acnodes.com.

1.7 Receiver Connection (Optional)

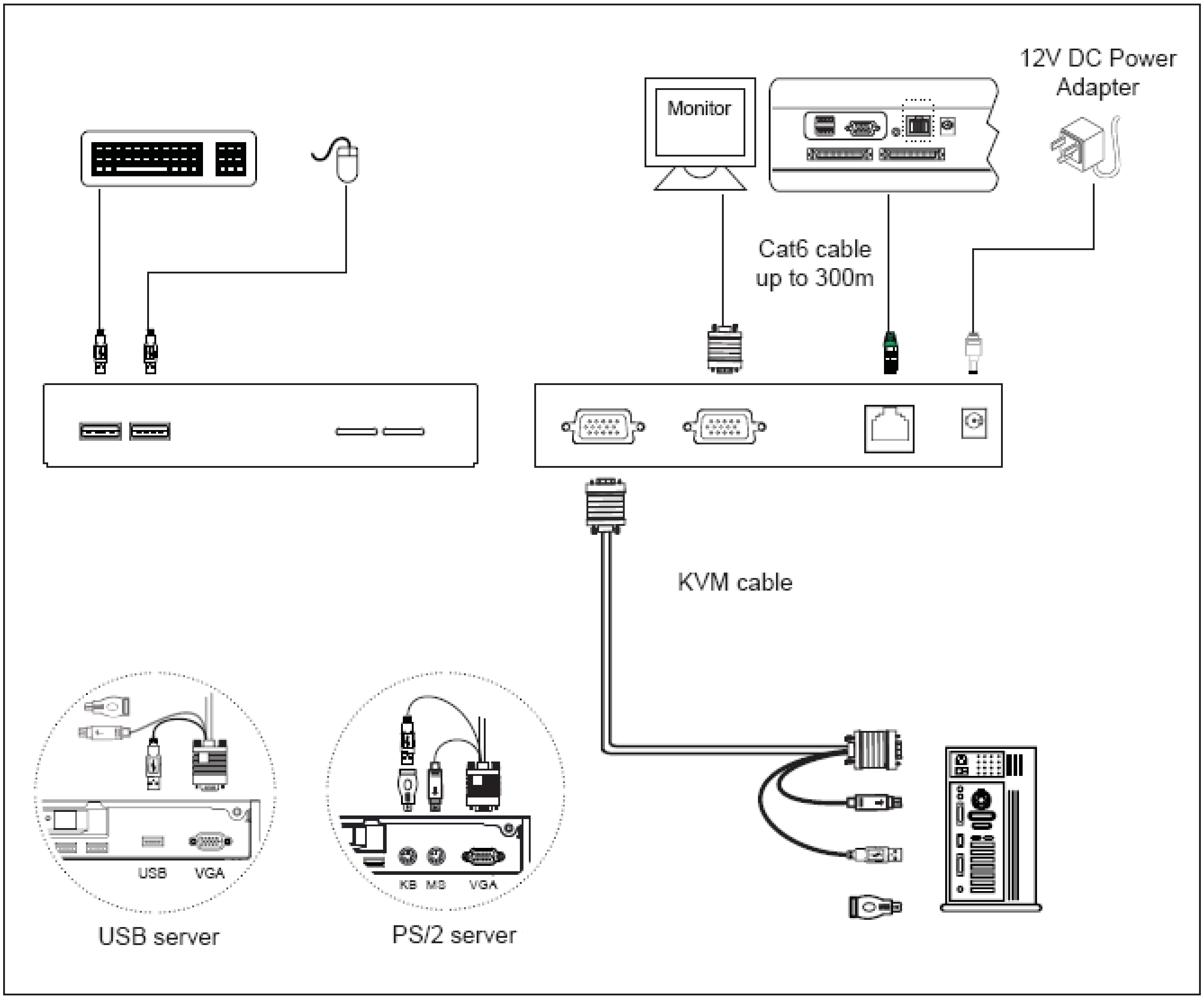

ACNODES
661 Brea Canyon Rd., Suite 3
Walnut, CA 91789
tel: 909.598.7388, fax: 909.598.0218, www.acnodes.com

© Copyright 2009 Acnodes, Inc.
All rights reserved. Product description and product specifications
are subject to change without notice. For latest product information,
please visit Acnodes' web site at www.acnodes.com.

1.8 KVM Cables

Matrix KVM cascade cable
2.1 3 feet

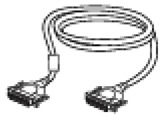

Cat5 cable
3.1 3 feet
3.2 6 feet
3.3 10 feet
3.4 15 feet
3.5 33 feet
3.6 66 feet

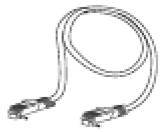

Combo KVM cascade cable
4.1 6 feet

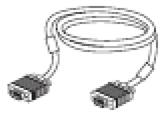

DVI-USB Dongle
5.1 DVI-D

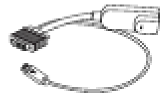

VGA-USB Dongle
6.1 USB

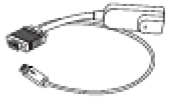

VGA-PS/2 Dongle
7.1 PS/2

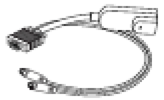

Power cord
8.1 power cord
8.2 power cord (US)
8.3 power cord (UK)
8.4 power cord (German)
8.5 power cord (Australia)

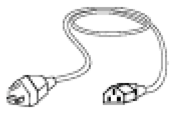

ACNODES
661 Brea Canyon Rd., Suite 3
Walnut, CA 91789
tel: 909.598.7388, fax: 909.598.0218, www.acnodes.com

© Copyright 2009 Acnodes, Inc.
All rights reserved. Product description and product specifications are subject to change without notice. For latest product information, please visit Acnodes' web site at www.acnodes.com.